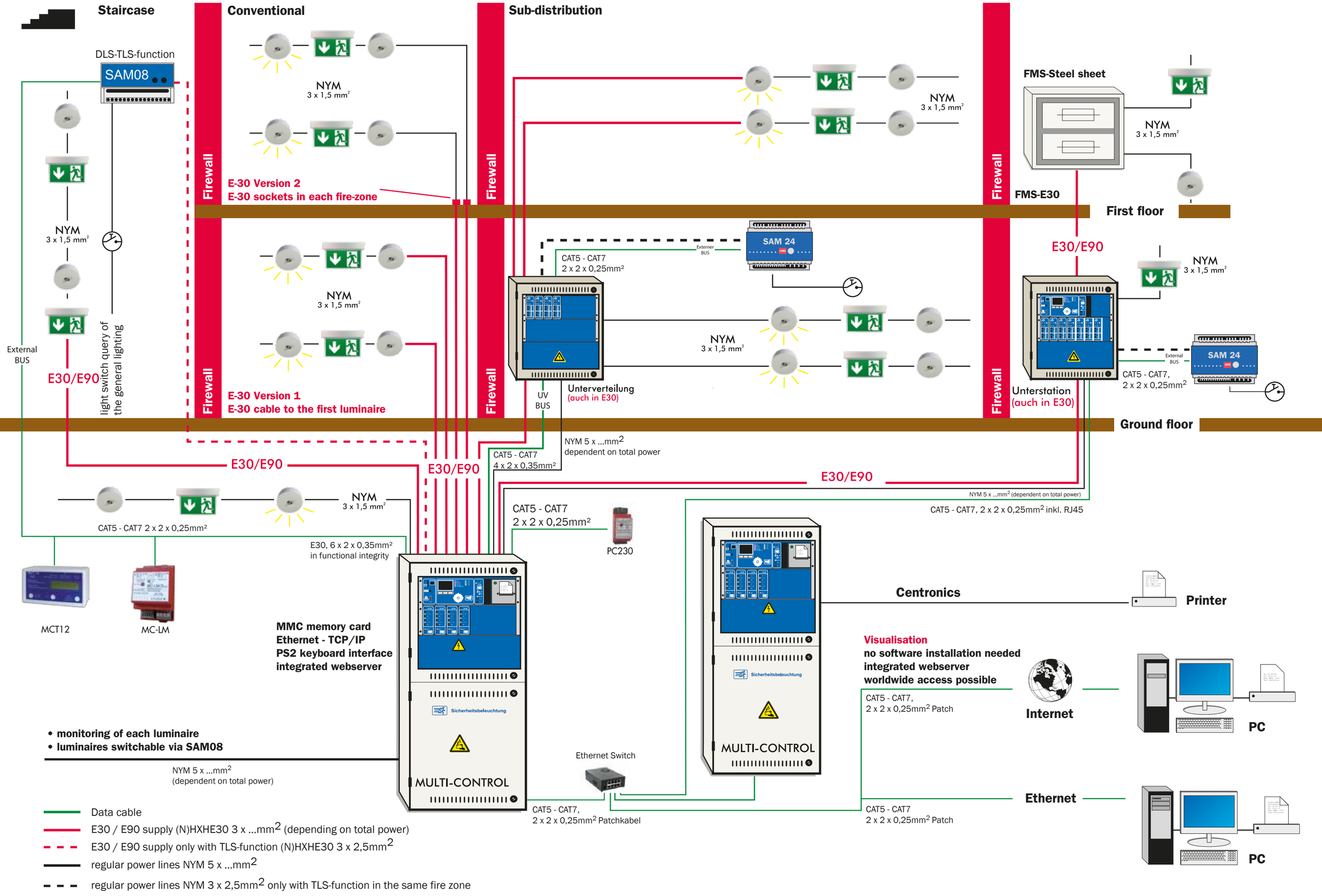
Staircase
Conventional
Sub-distribution
DLS-TLS-function
SAM08
NYM
3 x 1,5 mm²
Firewall
E-30 Version 2
E-30 sockets in each fire-zone
E-30 Version 1
E-30 cable to the first luminaire
External BUS
E30/E90
light switch query of the general lighting
FMS-Steel sheet
FMS-E30
First floor
SAM 24
Externer BUS
CAT5 - CAT7
2 x 2 x 0,25mm²
Unterverteilung
(auch in E30)
UV BUS
Unterstation
(auch in E30)
CAT5 - CAT7,
2 x 2 x 0,25mm²
Ground floor
NYM 5 x ...mm²
dependent on total power
CAT5 - CAT7
4 x 2 x 0,35mm²
CAT5 - CAT7 2 x 2 x 0,25mm²
E30, 6 x 2 x 0,35mm²
in functional integrity
PC230
NYM 5 x ...mm² (dependent on total power)
CAT5 - CAT7, 2 x 2 x 0,25mm² inkl. RJ45
MCT12
MC-LM
MMC memory card
Ethernet - TCP/IP
PS2 keyboard interface
integrated webserver
Sicherheitsbeleuchtung
MULTI-CONTROL
Centronics
Printer
Visualisation
no software installation needed
integrated webserver
worldwide access possible
CAT5 - CAT7,
2 x 2 x 0,25mm² Patch
Internet
PC
• monitoring of each luminaire
• luminaires switchable via SAM08
NYM 5 x ...mm²
(dependent on total power)
Ethernet Switch
CAT5 - CAT7,
2 x 2 x 0,25mm² Patchkabel
Ethernet
CAT5 - CAT7
2 x 2 x 0,25mm² Patch
Data cable
E30 / E90 supply (N)HXHE30 3 x ...mm² (depending on total power)
E30 / E90 supply only with TLS-function (N)HXHE30 3 x 2,5mm²
regular power lines NYM 5 x ...mm²
regular power lines NYM 3 x 2,5mm² only with TLS-function in the same fire zone